Datasheet 720
10/31/2012

Eclipse Butterfly Valves

Full Port & Reduced Port

Manual Control BV

Automatic Control BV

(Shown with Optional Crank Arm)

Product Description

Eclipse Butterfly Valves are designed to control air and gas flow to all types of combustion systems. They **should not** be used as tight shut-off valves.

Types Available

Valves are available for either manual or automatic control in pipe sizes 1/2" to 8". Full port, reduced port and high pressure drop constructions are available depending on pipe size and connection.

Thread Connections

The 1/2" through 4" valves are available with either NPT or Rc threads. The 6" and 8" valves are wafer type butterfly valves designed to be sandwiched between flanges on connecting pipes.

Disks

Furnished with beveled or non-beveled disks, according to the selection table.

Indication

All Eclipse butterfly valves feature an easy to read indicator plate and a slot on the end of the shaft to provide visual indication of the disk position.

Control

Manual butterfly valves 4" and smaller have an adjusting cover for setting disk position. A locking screw secures the cover at the desired setting.

Automatic control butterfly valves can be fitted with an optional crank arm or coupling. This allows integration with a variety of position control devices.

Manual wafer butterfly valves are adjusted by rotating a control arm which can be locked to the indicating plate after positioning.

Accessories

Eclipse stocks a selection of electric operators and mounting kits which can be ordered separately. The extended shaft length on the automatic butterfly valves allows the addition of either a second control arm for simultaneous automatic operation in dual valve applications, or a cam for a high/low fire microswitch arrangement.

ECLIPSE®
Innovative Thermal Solutions

Main Specifications

Parameter	Specifications	
Maximum Operating Pressure	1/2" - 4" (15 - 100 mm)	5 psig (350 mbarg)
	6" - 8" (150 - 200 mm)	3 psig (210 mbarg)
Operating Temperature Range	NPT Version	-40 to 140°F (-40 to 60°C)
	Rc Version	32 to 140°F (0 to 60°C)
Materials of Construction	Body	Powder Coated Cast Iron
	Shaft	Zinc Plated Steel
	Disk	Carbon Steel
	Shaft Packing Seal	Nitrile Rubber (Buna-N)
Approvals	(UL) (only 1/2" thru 4" models)	
Typical Application	Control of air or gas flow in a combustion system	
Notes on European Applications	4" thread not acceptable for gas use. 3" thread is acceptable if pressure is limited to 100 mbar (1.5 psig)	
Approvals		

NPT Model Selection

	Full Port Valves						Reduced Port Valves			
	Manual		Automatic				Manual		Automatic	
	Beveled Disk 75° Rotation		Beveled Disk 75° Rotation		Non-Beveled Disk 360° Rotation		Beveled Disk 75° Rotation		Beveled Disk 75° Rotation	
NPT Size	**Catalog Number**	**Item Code**	**Catalog Number**	**Item Code**	**Catalog Number**	**Item Code**	**Catalog Number**	**Item Code**	**Catalog Number**	**Item Code**
1/2"*	102BV-B	501238	2BV-AB	501239	--------	--------	--------	--------	--------	--------
3/4"	103BV-B	501215	3BV-AB	501223	3BV-A	501200	--------	--------	--------	--------
1"	104BV-B	501216	4BV-AB	501224	4BV-A	501201	104BV-RB	501208	4BV-ARB	501231
1-1/4"	105BV-B	501217	5BV-AB	501225	5BV-A	501202	105BV-RB	501209	5BV-ARB	501232
1-1/2"	106BV-B	501218	6BV-AB	501226	6BV-A	501203	106BV-RB	501210	6BV-ARB	501233
2"	108BV-B	501219	8BV-AB	501227	8BV-A	501204	108BV-RB	501211	8BV-ARB	501234
2-1/2"	110BV-B	501220	10BV-AB	501228	10BV-A	501205	110BV-RB	501212	10BV-ARB	501235
3"	112BV-B	501221	12BV-AB	501229	12BV-A	501206	112BV-RB	501213	12BV-ARB	501236
4"	116BV-B	501222	16BV-AB	501230	16BV-A	501207	116BV-RB	501214	16BV-ARB	501237
6" wafer	124BV-B	500915	24BV-AB	500998	--------	--------	124BV-RB	500690	24BV-ARB	500975
8" wafer	132BV-B	500913	32BV-AB	500999	--------	--------	132BV-RB	500691	32BV-ARB	500976

* See note below.

	High Pressure Drop Valves			
	Manual		Automatic	
	Non-Beveled Disk 90° Rotation		Non-Beveled Disk 360° Rotation	
NPT Size	**Catalog Number**	**Item Code**	**Catalog Number**	**Item Code**
1/2"*	402BV-HD	100129	402BV-AHD	100130
3/4"	403BV-HD	100133	403BV-AHD	100134
1"	404BV-HD	100119	404BV-AHD	100123

* See note below.

***NOTE:** Beveled disks physically stop against the body in the closed position. ALL 1/2" Butterfly Valves (NPT/Rc, Manual/Automatic, Beveled/Non-beveled) DO NOT have a mechanical stop limiting the travel to 75° rotation. The effective travel for flow control is 75° but the shaft will rotate 360°. The terms beveled and non-beveled do not apply to any of the 1/2" Butterfly Valves covered in this datasheet.

NOTE: Wafer Butterfly Valves are not threaded. For dimensional information, see page 7.

NPT Model Capacities

Multiply Capacity by the Factors Below for Gases Other than Air			
Gas - Sp. Gr.	**Natural - .6**	**Propane - 1.5**	**Butane - 2.0**
Multifactor	1.29	0.81	0.70

NPT Size	Flow Coefficient Cv-Full Open	Full Port								
		Capacity scfh air - "w.c. pressure drop								
		0.5	**0.75**	**1**	**1.5**	**2**	**3**	**4**	**6**	**8**
1/2"	5.5	173	212	244	299	345	422	487	595	685
3/4"	15.9	500	612	706	865	998	1,221	1,408	1,720	1,982
1"	29.7	933	1,143	1,319	1,615	1,864	2,280	2,630	3,213	3,702
1-1/4"	65.9	2,071	2,536	2,927	3,583	4,135	5,059	5,835	7,129	8,213
1-1/2"	111.0	3,489	4,272	4,931	6,036	6,965	8,521	9,828	12,009	13,834
2"	180.0	5,657	6,927	7,996	9,788	11,295	13,818	15,937	19,473	22,433
2-1/2"	322.0	10,121	12,391	14,304	17,509	20,206	24,719	28,510	34,836	40,131
3"	457.0	14,364	17,587	20,301	24,850	28,677	35,082	40,462	49,441	56,956
4"	819.0	25,741	31,517	36,383	44,534	51,394	62,871	72,513	88,604	102,072
6" wafer	2600.0	81,718	100,055	115,501	141,377	163,154	199,591	230,201	281,283	324,039
8" wafer	4200.0	132,007	161,628	186,578	228,379	263,557	322,417	371,864	454,380	523,448

NPT Size	Flow Coefficient Cv-Full Open	Reduced Port								
		Capacity scfh air - "w.c. pressure drop								
		0.5	**0.75**	**1**	**1.5**	**2**	**3**	**4**	**6**	**8**
1"	14.1	443	543	626	767	885	1,082	1,248	1,525	1,757
1-1/4"	22.8	717	877	1,013	1,240	1,431	1,750	2,019	2,467	2,842
1-1/2"	31.4	987	1,208	1,395	1,707	1,970	2,410	2,780	3,397	3,913
2"	62.7	1,971	2,413	2,785	3,409	3,935	4,813	5,551	6,783	7,814
2-1/2"	87.9	2,763	3,383	3,905	4,780	5,516	6,748	7,783	9,510	10,955
3"	149.0	4,683	5,734	6,619	8,102	9,350	11,438	13,192	16,120	18,570
4"	244.0	7,669	9,390	10,839	13,268	15,311	18,731	21,604	26,397	30,410
6" wafer	553.0	17,381	21,281	24,566	30,070	34,702	42,452	48,962	59,827	68,921
8" wafer	721.5	22,677	27,765	32,051	39,232	45,275	55,387	63,881	78,056	89,921

NPT Size	Flow Coefficient Cv-Full Open	High Pressure Drop								
		Capacity scfh air - "w.c. pressure drop								
		0.5	**0.75**	**1**	**1.5**	**2**	**3**	**4**	**6**	**8**
1/2"	2.7	85	104	120	147	169	207	239	292	337
3/4"	3.2	101	123	142	174	201	246	283	346	399
1"	4.2	132	162	187	228	264	322	372	454	523

Dimensions, Manual Valves with NPT Threads

NPT Size	Full Port Beveled Disk 75° Rotation			Reduced Port Beveled Disk 75° Rotation			High Pressure Drop 90° Rotation			Dimensions, Inches			
	Catalog Number	Item Code	Bore Inches	Catalog Number	Item Code	Bore Inches	Catalog Number	Item Code	Bore Inches	A	B	C	D
1/2"*	102BV-B	501238	0.61	-	-	-	402BV-HD	100129	0.44	3.01	3.07	2.06	1.19
3/4"	103BV-B	501215	0.87	-	-	-	403BV-HD	100133	0.55	3.01	3.06	2.06	1.19
1"	104BV-B	501216	1.10	104BV-RB	501208	0.87	404BV-HD	100119	2 x 0.44	2.95	3.32	2.13	1.33
1-1/4"	105BV-B	501217	1.46	105BV-RB	501209	1.02				3.15	3.55	2.25	1.50
1-1/2"	106BV-B	501218	1.65	106BV-RB	501210	1.18				3.15	3.83	2.37	1.63
2"	108BV-B	501219	2.13	108BV-RB	501211	1.54				3.15	4.46	2.69	1.94
2-1/2"	110BV-B	501220	2.64	110BV-RB	501212	1.77				3.90	5.07	3.08	2.25
3"	112BV-B	501221	3.23	112BV-RB	501213	2.24				3.94	5.58	3.32	2.50
4"	116BV-B	501222	4.17	116BV-RB	501214	2.80				5.00	6.64	3.83	3.06

* See note below.

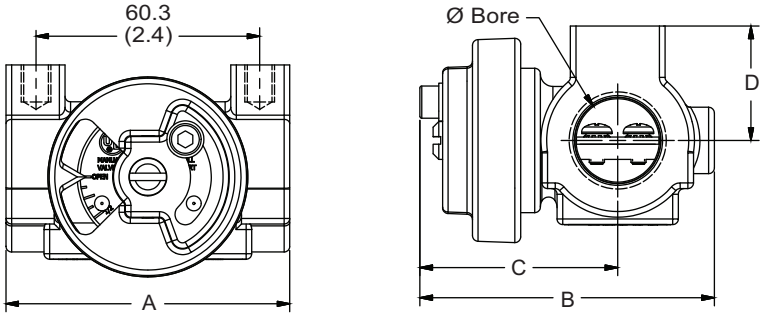

Dimensions, Automatic Valves with NPT Threads

NPT Size	Full Port Beveled Disk 75° Rotation		Full Port Non-Beveled Disk 360° Rotation			Reduced Port Beveled Disk 75° Rotation			High Pressure Drop 360° Rotation			Dimensions, Inches			
	Catalog Number	Item Code	Catalog Number	Item Code	Bore Inches	Catalog Number	Item Code	Bore Inches	Catalog Number	Item Code	Bore Inches	A	B	C	D
1/2"*	2BV-AB	501239	-	-	0.61	-	-	-	402BV-AHD	100130	0.44	3.01	3.68	2.68	1.19
3/4"	3BV-AB	501223	3BV-A	501200	0.87	-	-	-	403BV-AHD	100134	0.55	3.01	3.68	2.68	1.19
1"	4BV-AB	501224	4BV-A	501201	1.10	4BV-ARB	501231	0.87	404BV-AHD	100123	2 x 0.44	2.95	3.94	2.76	1.33
1-1/4"	5BV-AB	501225	5BV-A	501202	1.46	5BV-ARB	501232	1.02				3.15	4.17	2.76	1.50
1-1/2"	6BV-AB	501226	6BV-A	501203	1.65	6BV-ARB	501233	1.18				3.15	4.45	2.99	1.63
2"	8BV-AB	501227	8BV-A	501204	2.13	8BV-ARB	501234	1.54				3.15	5.08	3.31	1.94
2-1/2"	10BV-AB	501228	10BV-A	501205	2.64	10BV-ARB	501235	1.77				3.90	5.69	3.70	2.25
3"	12BV-AB	501229	12BV-A	501206	3.23	12BV-ARB	501236	2.24				3.94	6.20	3.94	2.50
4"	16BV-AB	501230	16BV-A	501207	4.17	16BV-ARB	501237	2.80				5.00	7.26	4.45	3.06

* See note below.

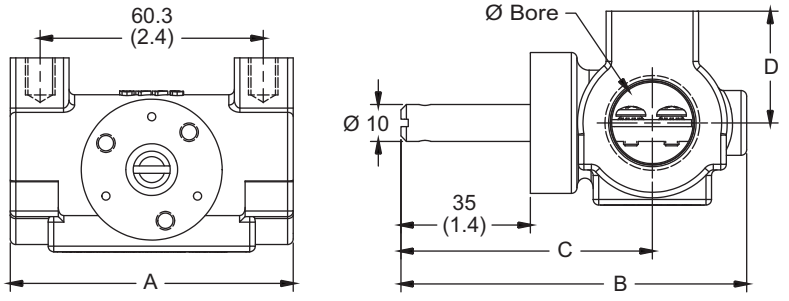

Actuator Bracket Mounting Holes

1/2" thru 2-1/2"

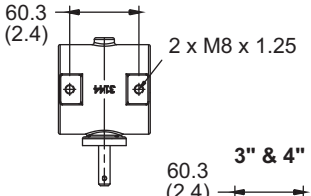

3" & 4"

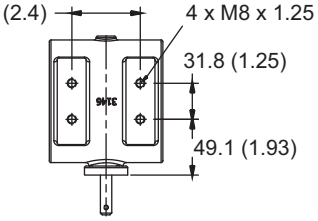

***NOTE:** Beveled disks physically stop against the body in the closed position. ALL 1/2" Butterfly Valves (NPT/Rc, Manual/Automatic Beveled/Non-beveled) DO NOT have a mechanical stop limiting the travel to 75° rotation. The effective travel for flow control is 75° but the shaft will rotate 360°. The terms beveled and non-beveled do not apply to any of the 1/2" Butterfly Valves covered in this datasheet.

Rc Model Selection

Rc Size	Full Port Valves						Reduced Port Valves					
	Manual		Automatic				Manual		Automatic			
	Non-Beveled Disk 90° Rotation		Beveled Disk 75° Rotation		Non-Beveled Disk 360° Rotation		Non-Beveled Disk 90° Rotation		Beveled Disk 75° Rotation		Non-Beveled Disk 360° Rotation	
	Catalog Number	Item Code	Catalog Number	Item Code	Catalog Number	Item Code	Catalog Number	Item Code	Catalog Number	Item Code	Catalog Number	Item Code
1/2"*	102BVM	101103	-	-	2BVM-A	202081	-	-	-	-	-	-
3/4"	103BVM	101104	3BVM-AB	101011512	3BVM-A	101248	-	-	-	-	-	-
1"	104BVM	101105	4BVM-AB	101011513	4BVM-A	101249	104BVM-R	101255	4BVM-ARB	101011526	4BVM-AR	101261
1-1/4"	-	-	-	-	-	-	-	-	-	-	-	-
1-1/2"	106BVM	10106	6BVM-AB	101011514	6BVM-A	101250	106BVM-R	101256	6BVM-ARB	101011527	6BVM-AR	101262
2"	108BVM	101107	8BVM-AB	101011515	8BVM-A	101251	108BVM-R	101257	8BVM-ARB	101011528	8BVM-AR	101263
2-1/2"	110BVM	101108	10BVM-AB	101011516	10BVM-A	101252	110BVM-R	101258	10BVM-ARB	101011529	10BVM-AR	101264
3"	112BVM	101109	12BVM-AB	101011517	12BVM-A	101253	112BVM-R	101259	12BVM-ARB	101011530	12BVM-AR	101265
4"	116BVM	101110	16BVM-AB	101011518	16BVM-A	101254	116BVM-R	101260	16BVM-ARB	101011531	16BVM-AR	101266
6" wafer	**NOTE:** Selection information for these valves appears on page 2. Wafer BV Valves are not threaded and may be used with DN 150 and DN											
8" wafer	200 flanged fittings. See dimensions on page 7.											

* See note below.

Rc Size	High Pressure Drop Valves			
	Manual		Automatic	
	Non-Beveled Disk 90° Rotation		Non-Beveled Disk 360° Rotation	
	Catalog No	Item Code	Catalog No	Item Code
1/2"*	402BVM-HD	100131	402BVM-AHD	100132
3/4"	403BVM-HD	100135	403BVM-AHD	100136
1"	404BVM-HD	100120	404BVM-AHD	100100

* See note to the right.

***NOTE**: Beveled disks physically stop against the body in the closed position. ALL 1/2" Butterfly Valves (NPT/Rc, Manual/Automatic Beveled/Non-beveled) DO NOT have a mechanical stop limiting the travel to 75° rotation. The effective travel for flow control is 75° but the shaft will rotate 360°. The terms beveled and non-beveled do not apply to any of the 1/2" Butterfly Valves covered in this datasheet.

Rc Model Capacities

Multiply Capacity by the Factors Below for Gases Other than Air			
Gas - Sp. Gr.	Natural - .6	Propane - 1.5	Butane - 2.0
Multifactor	1.29	0.81	0.70

Rc Size	Flow Coefficient CV-Full Open	Full Port							
		Capacity nm^3/h air - mbar pressure drop							
		1	2	3	5	8	10	13	15
1/2"	4.7	4	6	7	9	12	13	15	16
3/4"	13.7	12	17	21	27	34	38	43	46
1"	25.5	22	32	39	50	63	70	80	86
1-1/2"	95.8	84	118	145	187	236	264	300	322
2"	155.0	136	192	234	302	382	427	486	521
2-1/2"	277.0	242	342	419	541	683	763	868	932
3"	393.0	344	486	595	767	969	1,082	1,232	1,322
4"	704.0	615	870	1,065	1,374	1,735	1,938	2,207	2,368
6" wafer	2251.0	1,968	2,782	3,405	4,392	5,548	6,197	7,056	7,572
8" wafer	3637.0	3,180	4,495	5,502	7,097	8,964	10,013	11,400	12,234

Rc Size	Flow Coefficient Kv-Full Open	Reduced Port							
		Capacity nm^3/h air - mbar pressure drop							
		1	2	3	5	8	10	13	15
1"	12.1	11	15	18	24	30	33	38	41
1-1/2"	27.0	24	33	41	53	67	74	85	91
2"	53.9	47	67	82	105	133	148	169	181
2-1/2"	75.9	66	94	115	148	187	209	238	255
3"	128.0	112	158	194	250	315	352	401	431
4"	210.0	184	260	318	410	518	578	658	706
6" wafer	479.0	419	592	725	935	1,181	1,319	1,501	1,611
8" wafer	625.0	546	772	946	1,220	1,540	1,721	1,959	2,102

Rc Size	Flow Coefficient Kv-Full Open	High Pressure Drop							
		Capacity nm^3/h air - mbar pressure drop							
		1	2	3	5	8	10	13	15
1/2"	2.3	2.0	2.8	3.5	4.5	5.7	6.3	7.2	7.7
3/4"	2.8	2.4	3.5	4.2	5.5	6.9	7.7	8.8	9.4
1"	3.6	3.1	4.4	5.4	7.0	8.9	9.9	11.3	12.1

Dimensions, Manual Valves with Rc Threads

Rc Size	Full Port			Reduced Port			High Pressure Drop			Dimensions, mm			
	Non-Beveled Disk 90° Rotation			Non-Beveled Disk 90° Rotation			90° Rotation						
	Catalog Number	Item Code	Bore mm	Catalog Number	Item Code	Bore mm	Catalog Number	Item Code	Bore mm	A	B	C	D
1/2"*	102BVM	101103	15.5	-	-	-	402BVM-HD	100131	11.1	76.5	77.9	52.4	30.2
3/4"	103BVM	101104	22	-	-	-	403BVM-HD	100135	13.9	76.5	77.7	52.2	30.2
1"	104BVM	101105	28	104BVM-R	101255	22	404BVM-HD	100120	2 x 11.1	75.0	84.2	54.2	33.7
1-1/2"	106BVM	101106	42	106BVM-R	101256	30				80.0	97.2	60.2	41.3
2"	108BVM	101107	54	108BVM-R	101257	39				80.0	113.2	68.2	49.3
2-1/2"	110BVM	101108	67	110BVM-R	101258	45				99.0	128.7	78.2	57.1
3"	112BVM	101109	82	112BVM-R	101259	57				100.0	141.7	84.2	63.5
4"	116BVM	101110	106	116BVM-R	101260	71				127.0	168.7	97.2	77.8

* See note below.

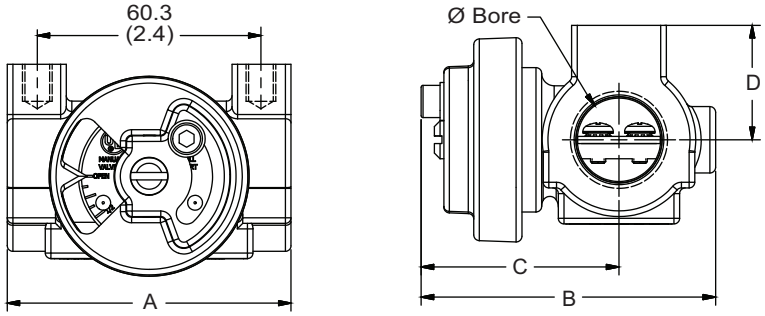

Dimensions, Automatic Valves with Rc Threads

Rc Size	Full Port					Reduced Port				
	Beveled Disk 75° Rotation		Non-Beveled Disk 360° Rotation		Bore mm	Beveled Disk 75° Rotation		Non-Beveled Disk 360° Rotation		Bore mm
	Catalog Number	Item Code	Catalog Number	Item Code		Catalog Number	Item Code	Catalog Number	Item Code	
1/2"*	-	-	2BVM-A	202081	15.5	-	-	-	-	-
3/4"	3BVM-AB	101011512	3BVM-A	101248	22	-	-	-	-	-
1"	4BVM-AB	101011513	4BVM-A	101249	28	4BVM-ARB	101011526	4BVM-AR	101261	22
1-1/2"	6BVM-AB	101011514	6BVM-A	101250	42	6BVM-ARB	101011527	6BVM-AR	101262	30
2"	8BVM-AB	101011515	8BVM-A	101251	54	8BVM-ARB	101011528	8BVM-AR	101263	39
2-1/2"	10BVM-AB	101011516	10BVM-A	101252	67	10BVM-ARB	101011529	10BVM-AR	101264	45
3"	12BVM-AB	101011517	12BVM-A	101253	82	12BVM-ARB	101011530	12BVM-AR	101265	57
4"	16BVM-AB	101011518	16BVM-A	101254	106	16BVM-ARB	101011531	16BVM-AR	101266	71

* See note below.

Rc Size	High Pressure Drop 360° Rotation			Dimensions, mm			
	Catalog Number	Item Code	Bore mm	A	B	C	D
1/2"*	402BVM-AHD	100132	11.1	76.5	93.5	68.0	30.2
3/4"	403BVM-AHD	100136	13.9	76.5	93.5	68.0	27.0
1"	404BVM-AHD	100100	2 x 11.1	75.0	100.0	70.0	33.7
1-1/2"				80.0	113.0	76.0	41.3
2"				80.0	129.0	84.0	49.3
2-1/2"				99.0	144.5	94.0	57.1
3"				100.0	157.5	100.0	63.5
4"				127.0	184.5	113.0	77.8

* See note below.

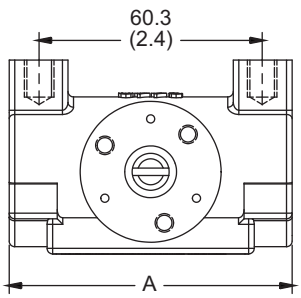

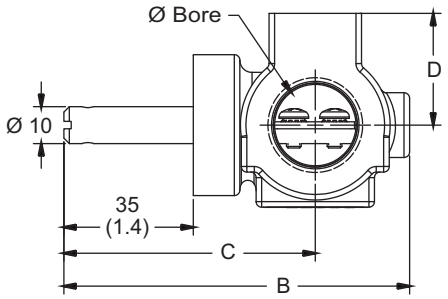

Actuator Bracket Mounting Holes

1/2" thru 2-1/2"

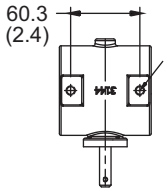

3" & 4"

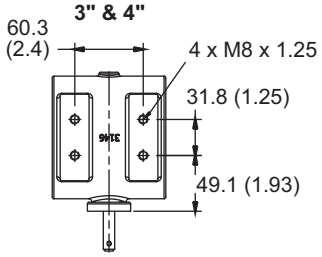

***NOTE:** Beveled disks physically stop against the body in the closed position. ALL 1/2" Butterfly Valves (NPT/Rc, Manual/Automatic Beveled/Non-beveled) DO NOT have a mechanical stop limiting the travel to 75° rotation. The effective travel for flow control is 75° but the shaft will rotate 360°. The terms beveled and non-beveled do not apply to any of the 1/2" Butterfly Valves covered in this datasheet.

Dimensions, Wafer Type Valves

Manual Valves

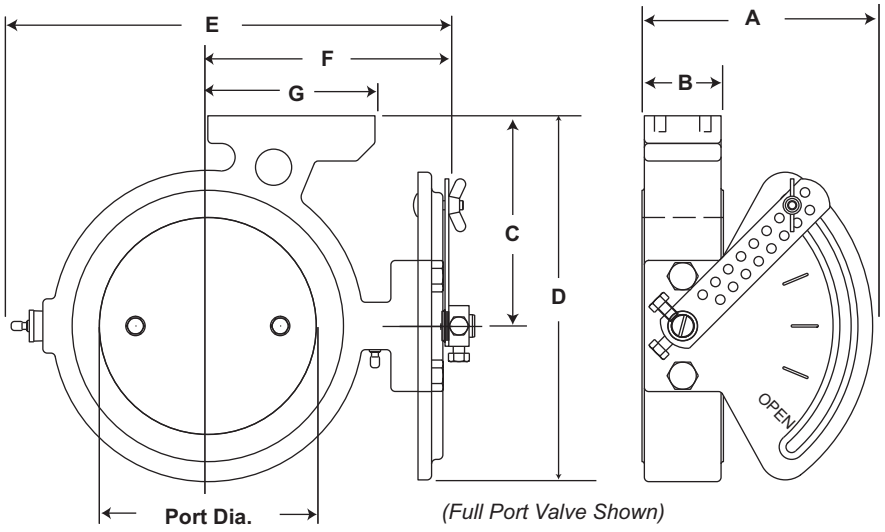

(Full Port Valve Shown)

Size	Catalog Number	Item Code	Dimensions mm (in)								
			A	B	C	D	E	F	G	Port Diameter	Approx. Weight
Full Port Manual											
6"	124BV-B	500915	162 (6.38)	57 (2.25)	148 (5.81)	257 (10.13)	289 (11.38)	97 (3.81)	117 (4.63)	152 (6.00)	13 (28
8"	132BV-B	500913	162 (6.38)	57 (2.25)	178 (7.00)	317 (12.47)	351 (13.81)	206 (8.13)	130 (5.13)	203 (8.00)	16 (36)
Reduced Port Manual											
6"	124BV-RB	500690	162 (6.38)	57 (2.25)	148 (5.81)	257 (10.13)	289 (11.38)	97 (3.81)	117 (4.63)	108 (4.25)	16 (35)
8"	132BV-RB	500691	162 (6.38)	57 (2.25)	178 (7.00)	317 (12.47)	351 (13.81)	206 (8.13)	130 (5.13)	130 (5.12)	23 (50)

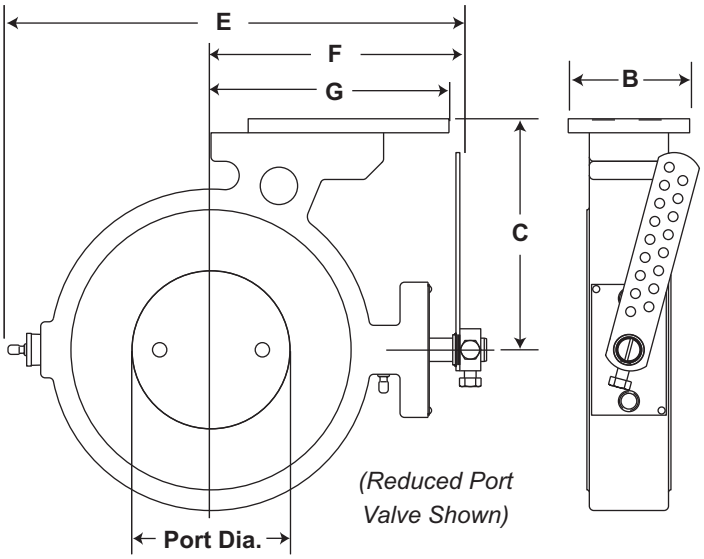

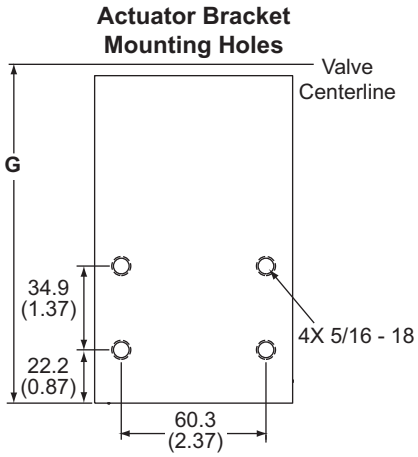

Size	Catalog Number	Item Code	Dimensions mm (in)								
			A	B	C	D	E	F	G	Port Diameter	Approx. Weight
Full Port Auto											
6"	24BV-AB	500998	162 (6.38)	83 (3.25)	157 (6.18)	257 (10.13)	289 (11.38)	97 (3.81)	162 (6.38)	152 (6.00)	13 (28)
8"	32BV-AB	500999	162 (6.38)	83 (3.25)	187 (7.38)	317 (12.47)	351 (13.83)	206 (8.13)	193 (7.60)	203 (8.00)	16 (36)
Reduced Port Auto											
6"	24BV-ARB	500975	162 (6.38)	83 (3.25)	157 (6.18)	257 (10.13)	289 (11.38)	97 (3.81)	162 (6.38)	108 (4.25)	16 (35)
8"	32BV-ARB	500976	162 (6.38)	83 (3.25)	187 (7.38)	317 (12.47)	351 (13.81)	206 (8.13)	193 (7.60)	130 (5.12)	23 (50)

Accessories for Automatic BV's

Control Motor Mounting Kits	Major Components				
Eclipse Trilogy T500 Actuator	**Kit Item Code**	**Support**	**Set Screw**	**Coupling**	**Crank Arm**
1/2 inch through 4 inch[1]	101015550	101015549	10050816	00.4095056.40	Crank arms not required
1/2 inch through 3/4 inch[2]	10047900	10047436	10050816	00.4095056.40	
1 inch[2]	10047901	10047437	10050816	00.4095056.40	
1-1/4 inch[2]	10047902	10047867	10050816	00.4095056.40	
1-1/2 inch[2]	10047903	10047438	10050816	00.4095056.40	
2 inch[2]	10047904	10047439	10050816	00.4095056.40	
2-1/2 inch[2]	10047905	10047440	10050816	00.4095056.40	
3 inch[2]	10047906	10047441	10050816	00.4095056.40	
4 inch[2]	10047907	10047442	10050816	00.4095056.40	
For assembled T500 and valve, see catalog 725, BV-Pak.					
Eclipse PRA6 Rotary Actuator	**Kit Item Code**	**Bracket**	**Control Rod**	**Coupling**	**Crank Arm**
RH mount, 1/2 thru 4, ver. 2	100127	21695	Rod not required	21048	Crank arms not required
LH mount, 1/2 thru 4, ver. 2	100128	21696		21048	
Perpendicular mount, 1/2 thru 1-1/2, ver. 2	100190	21934		21048	
Perpendicular mount, 2 & 2-1/2, ver. 2	100191	21935		21048	
Perpendicular mount, 3 & 4, ver. 2	100192	21936		21048	

Siemens SQM5	**Kit Item Code**	**Bracket**	**Control Rod**	**Coupling, 10 mm**	**Coupling, 3/8 sq**	**Crank Arm**
1/2"	Not applicable	10009523	Rod not required	10047700 and 10050816	10034079	Crank arms not required
3/4"		10009537				
1"		10009541				
1-1/2"		10009600				
2"		10009606				
3"		10017267				

EMP/EMA, Honeywell Mod IV	**Kit Item Code**	**Bracket**	**Control Rod**	**Coupling**	**Crank Arm**
1/2 thru 4 ver. 2	100099	13095	12730-1	14264	102265
1/2 thru 4 ver. 2, with 18093 crank arm	100099-1	13095	12730-1	14264	102265/18093
1/2 thru 4 ver. 2, automotive	100099-AUTO	13095	10024156-6	10017978	102265
1/2 thru 4 ver. 2,	10025305	13095	12730-1	14264	11652-6/18093
6 and 8 valves	500928-1	13095	12730-2	14264	500537
Honeywell M640 & M940	**Kit Item Code**	**Bracket**	**Control Rod**	**Coupling**	**Crank Arm**
1/2 thru 4 ver. 2	120079	13095 & 12758	12730-1	14264	102265

NOTES:

1. To service BV-Paks manufactured on or after 10/31/2012
2. To service BV-Paks manufactured before 10/31/2012

- Control Motor Mounting Kits contain brackets, couplings and miscellaneous screws and washers.
- The kits used with EMP/EMA and Honeywell valves also contain a control rod and crank arm.
- These mounting kits are designed to work in a majority of installations. Some applications may require special components.
- Items in the kit not listed are not available for individual sale.
- Contact the factory or your Eclipse representative for more detailed information.

Support for Eclipse T500 Actuator

To service BV-Paks manufactured on or after 10/31/2012

Support Item Code - see table above

Butterfly Valve with T500 actuator and support/coupling

T500 actuator can be mounted parallel or perpendicular to piping.

To service BV-Paks manufactured before 10/31/2012

Brackets for Eclipse PRA Rotary Actuator

Bracket Item Code 21695
Right hand mounting bracket for Eclipse Rotary Actuator

Bracket Item Code 21696
Left hand mounting bracket for Eclipse Rotary Actuator

Bracket Item Code 21934
for 1/2" to 1-1/2" valves
Bracket Item Code 21935
for 2" to 4" valves
Perpendicular mounting bracket for Eclipse Rotary Actuator

Crank Arms for General Use

Crank Arm Item Code	DIM "A"	
	mm	(in.)
500527	9.6	(0.380)
500535	12.8	(0.505)
500536	16.0	(0.630)

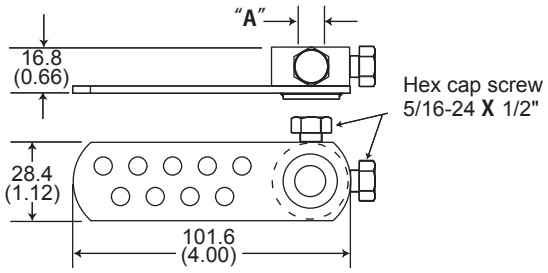

Materials: Zinc plated carbon steel

Crank Arm Item Code	DIM "A"	
	mm	(in.)
500537	16.0	(0.630)
500538	9.6	(0.380)
500539	12.8	(0.505)

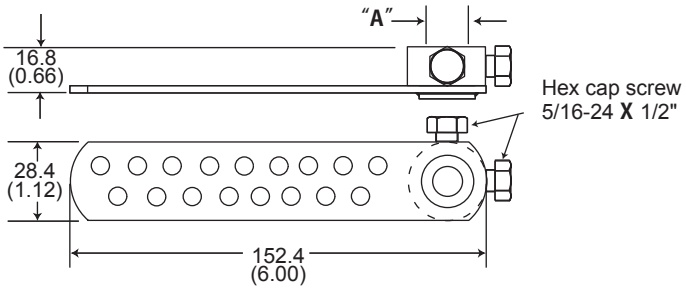

Materials: Zinc plated carbon steel

Item Code 102265 Dims: mm (in.)

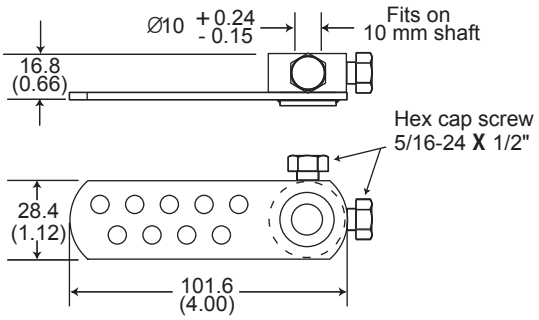

Materials: Zinc plated carbon steel

Linkage control rods

Zinc plated cold rolled steel				Stainless steel			
Dia. Inches	Item Code	Length mm	Length in	Dia. Inches	Item Code	Length mm	Length in
5/16	12730	203	(8)	1/2	10175-1	305	(12)
	12730-1	254	(10)		10175-2	381	(15)
	12730-2	381	(15)		10175-3	457	(18)
	12730-3	610	(24)		10175-4	610	(24)
	12730-5	253	(6)		10175-5	762	(30)
					10175-6	914	(36)
					10175-7	1219	(48)
					10175-8	1524	(60)
					10175-9	1829	(72)

Swivel Connectors for 5/16" Diameter Control Rods

Item Code 500558 is a rotating swivel block connector assembly for joining control rod to control arm. It allows 360° rotation.

Item Code 500569 serves to connect two control rods to one control arm and also allows 360° rotation.

Item Code 14316 swivel connector allows 360° rotation. It provides a 20° flex from the swivel center line to accommodate an angular approach of a linkage control rod, but immediacy of response is less positive than Item Code 14264 (at right).

Item Code 14264 is a non-flexing swivel connector that allows 360° rotation around swivel center line. It provides a more positive positioning and immediacy of response than Item Code 14316 (at left).

Swivel Connectors for 1/2" Diameter Control Rods

Item Code 500542 is a swivel block that rotates 360°.	Item Code 500543 is a single ball swivel that rotates 360° while permitting an angular approach of rod toward control arm.	Item Code 500544 is a double ball swivel that connects two rods to one control arm. Allows angular approach of rod to arm, rotates 360°.

Cams for High/Low Fire Microswitch

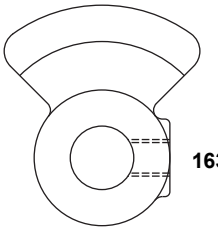

1631/1632

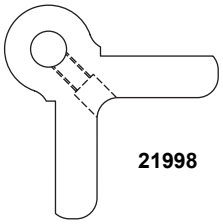

21998

Item Code	Description
1631-1	3/8" Shaft
1631-3	10 mm Shaft
1631-2	1/2" Shaft
1632-1	5/8" Shaft
21998	10 mm Shaft

ECLIPSE®
Innovative Thermal Solutions
www.eclipsenet.com