Datasheet 110-16
12/13/2013

Eclipse RatioMatic Burners

Model RM0700

Version 5

Parameter	Specification	
Blower Type	**Chamber Pressure "w.c. (mbar)**	**60 Hz**
Maximum Input, Btu/h (kW)[1] Contact factory for chamber pressures outside the given range, or varying chamber pressure conditions.	-5.0 (-12.4)	7,640,000 (2240)
	-2.0 (-5.0)	7,260,000 (2130)
	0.0 (0.0)	7,000,000 (2050)
	2.0 (5.0)	6,720,000 (1970)
	5.0 (12.4)	6,290,000 (1840)
Minimum Input On-Ratio, Btu/h (kW)[2]	80,000 (23)	
Main Gas Inlet Pressure, psig (mbar)[3] *Fuel pressure at ratio regulator inlet*	Natural Gas	1.0 to 2.5 (70 to 175)
	Propane	1.0 to 2.0 (70 to 140)
High Fire Flame Length, inches (mm) *Measured from the outlet end of the combustor*	Natural Gas	75 (1900)
	Propane	88 (2200)
Maximum Chamber Temperature, °F (°C)	Alloy Tube	1500 (815)
	Block & Holder	1900 (1038)
Flame Detection	Alloy Tube	Flamerod or UV Scanner
	Block & Holder	UV scanner only
Fuels[4] *For any other mixed gas, contact Eclipse, Inc.*	Natural Gas, Propane, Butane	
Blower Motor Power, Hp	7.5	
Weight, lbs (kg)[5]	Alloy Tube	410 (186)
	Refractory	556 (252)
Approvals	АИ30	

[1] Maximum inputs for packaged blower versions are given for the standard combustion air blower without an inlet air filter.
[2] Turndown input based on neutral chamber conditions. Contact Eclipse for other chamber pressures.
[3] For proper performance, this pressure must be kept constant across the burner operating range.
[4] See Design Guide 110 for more information about typical fuel composition and properties.
[5] All weights are approximate.

- All information is based on laboratory testing. Different chamber conditions will affect the data.
- All inputs based upon gross calorific values and standard conditions; 1 atmosphere, 70°F (21°C).
- Eclipse reserves the right to change the construction and/or configuration of our products at any time without being obliged to adjust earlier supplies accordingly.

ECLIPSE®
Innovative Thermal Solutions

Performance Graphs

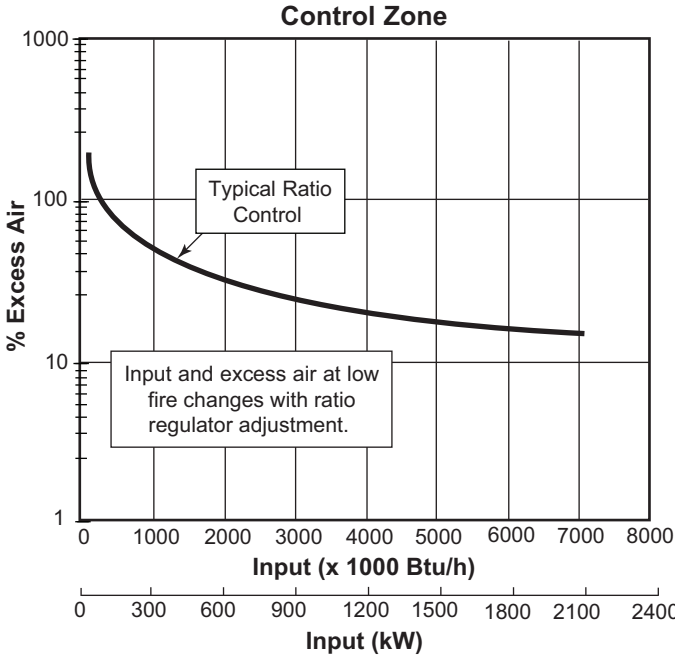

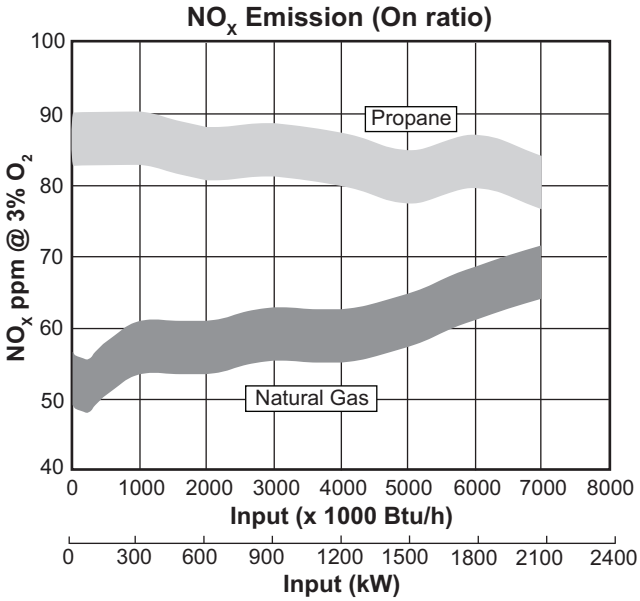

NOx Emission data is given for:

- Ambient combustion air ~70°F (21°C)
- Less than 1000°F (540°C) firing chamber
- Minimal process air velocity
- Low fire input adjusted to 80,000 Btu/h (23 kW)
- ppm volume, dry @ 3% O_2
- Neutral chamber pressure

Emissions from the burner are influenced by:

- Chamber conditions
- Fuel type
- Firing rate
- Ratio regulator adjustment
- Combustion air temperature

CO emission is largely influenced by chamber conditions. Contact your local Eclipse representative for an estimate of CO emission on your application.

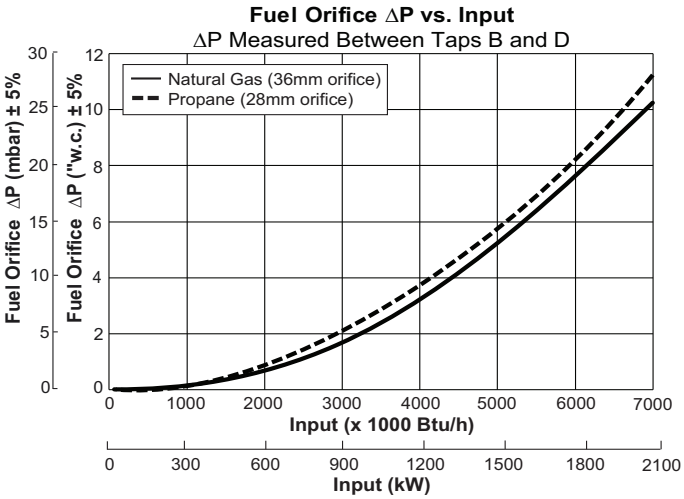

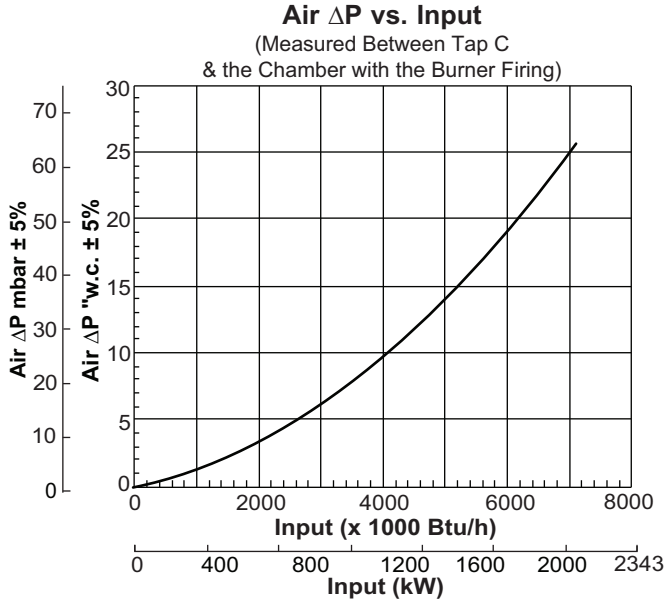

Dimensions and Specifications

Dimensions in mm (in)

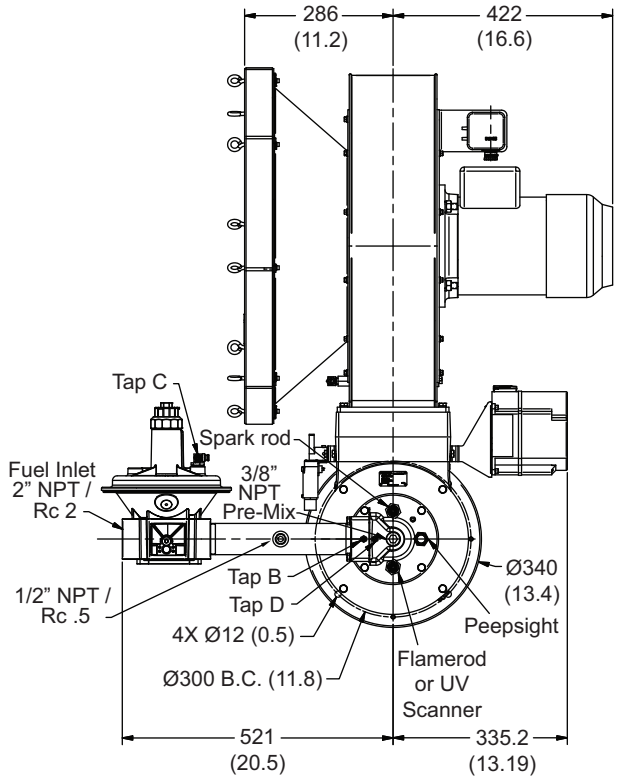

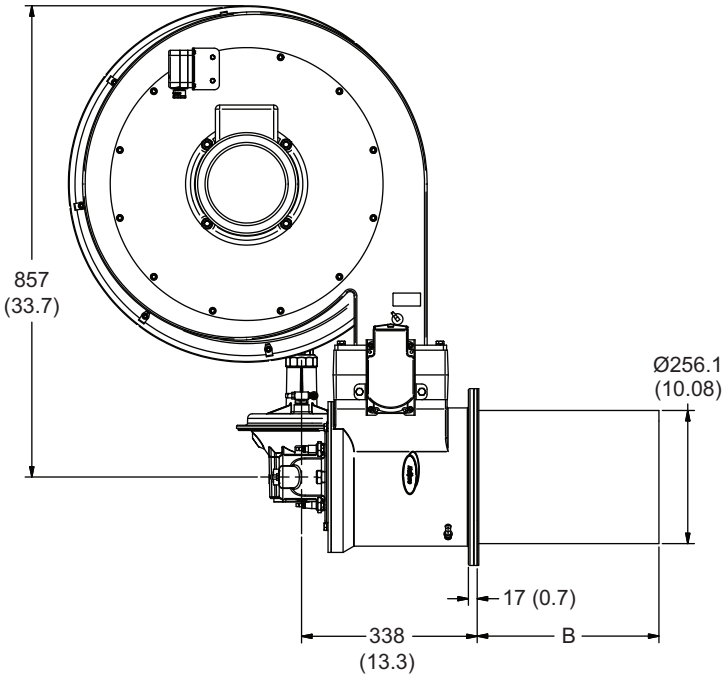

Combustor Type	B
Straight Stainless Steel Alloy Tube	349.6 (13.8)
Straight Stainless Steel Alloy Tube	425.6 (16.8)

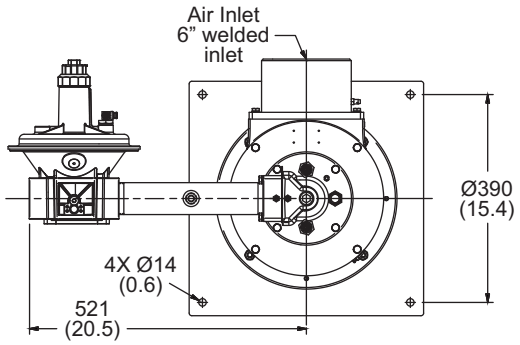

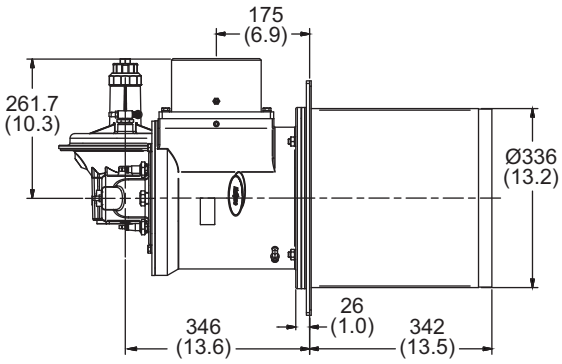

Square Block and Holder

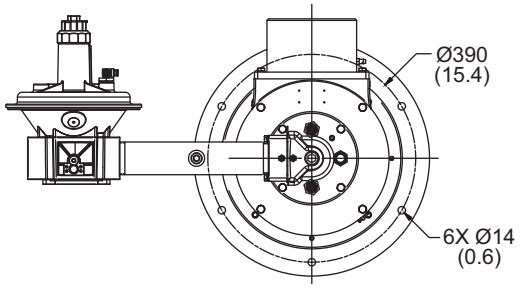

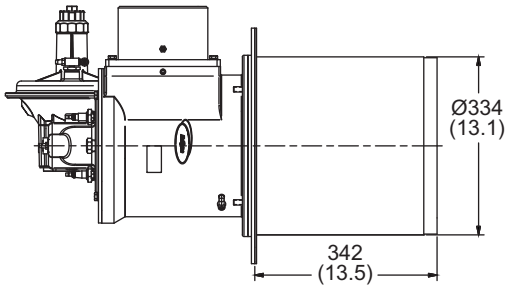

Round Block and Holder

Combustor Options

Alloy Tube

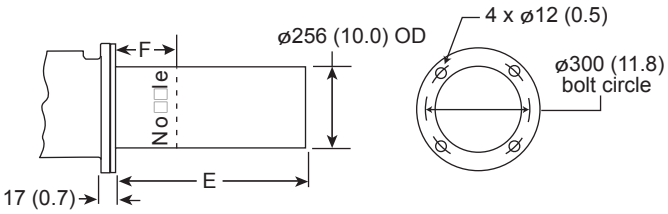

E	F
350 (13.8)	153 (6.0)
426 (16.8)	229 (9.0)

Square Block & Holder

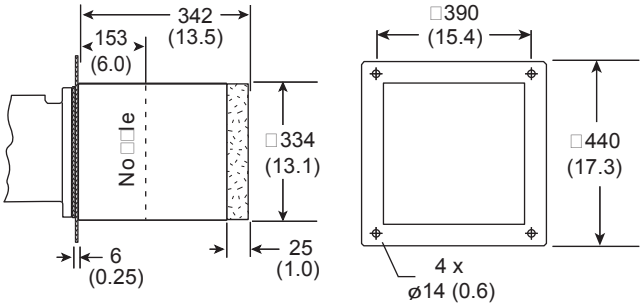

Round Block & Holder

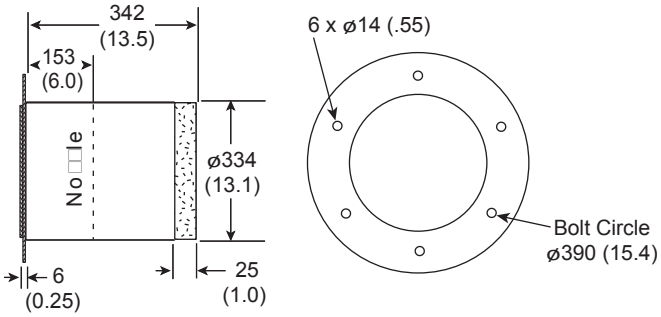

Burner Configurations

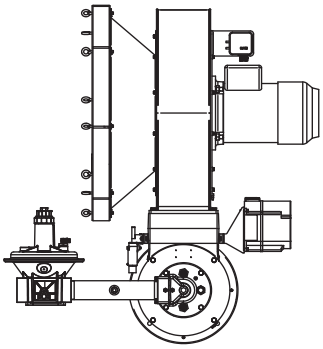

Upright Left Hand Piping

Inverted Left Hand Piping

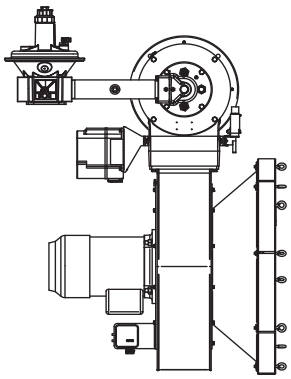

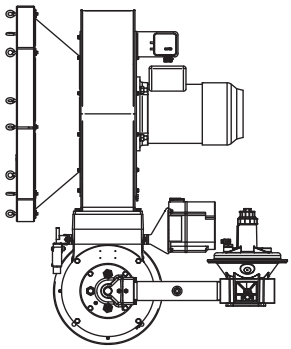

Upright Right Hand Piping

Inverted Right Hand Piping

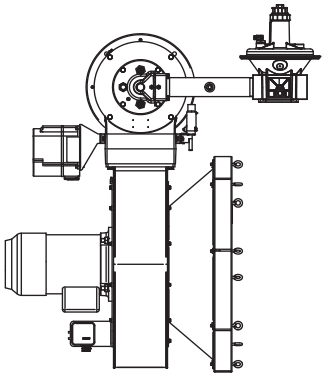

ECLIPSE®
Innovative Thermal Solutions
www.eclipsenet.com