Datasheet 111-5
8/26/2011

Eclipse Winnox Burners

Model WX0100

Version 2

Parameter		Specifications	
Blower Type		**Packaged Blower** Nominal (60Hz)	**Remote Blower** Pressure at Air Inlet 1 psig (70 mbar)
Maximum Input, BTU/hr (kW)[1]	Chamber Pressure "w.c. (mbar)		
Contact factory for chamber pressures outside the given range, or varying chamber pressure conditions.	-5.0 (-12.5)	1,130,000 (333)	1,300,000 (381)
	-3.0 (-7.5)	1,080,000 (316)	1,260,000 (371)
	0.0	1,000,000 (293)	1,200,000 (352)
	1.0 (2.5)	970,000 (284)	1,180,000 (346)
	2.0 (5.0)	940,000 (275)	1,150,000 (338)
Minimum Input, BTU/hr (kW)		143,000 (42)	143,000 (42)
Fuel Inlet Pressure at Ratio Regulator, "w.c. (mbar)[2]	Maximum	27.7 (70)	27.7 (70)
	Minimum	22.0 (55)	26.0 (65)
Maximum Chamber Temperature, °F (°C) *Tube and plug temperatures should be reduced 150°F when using propane or butane.*		Standard combustion tube: 1300 (705) High temperature combustion tube: 1550 (845) Refractory plug: 1800 (985)[3]	
Flame Length	Alloy Tube	Flame is inside tube at all times.	
Excess Air,% at High Fire		40% - 70%	
Pipe Connections		NPT or BSP connections available.	
Flame Detection		Flame rod or UV scanner.	
Fuels *For any other mixed gas, contact Eclipse Inc.*		Natural gas and propane[4]	
Blower Motor Power, Hp		1.5	-
Weight, lbs (kg)[5]	Alloy Tube	192 (87)	124 (56)
	Refractory Plug	175 (79)	107 (48)
Approvals		АИ30	

[1] Maximum inputs for packaged blower versions are given for the standard combustion air blower without an inlet air filter.
[2] For proper performance, this pressure must be kept constant across the burner operating range.
[3] See page 3 of this datasheet and Installation Guide 111 for “Refractory Plug Only” installation.
[4] See Design Guide 111 for more information about typical fuel composition and properties.
[5] All weights are approximate.

- All inputs are based on gross calorific values and standard conditions: one atmosphere, 70°F (21°C).
- All information is based on laboratory testing. Different chamber size and conditions will affect data.
- Eclipse reserves the right to change the construction and/or configurations of our products at any time without being obliged to adjust earlier supplies accordingly.

ECLIPSE®
Innovative Thermal Solutions

Performance Graphs

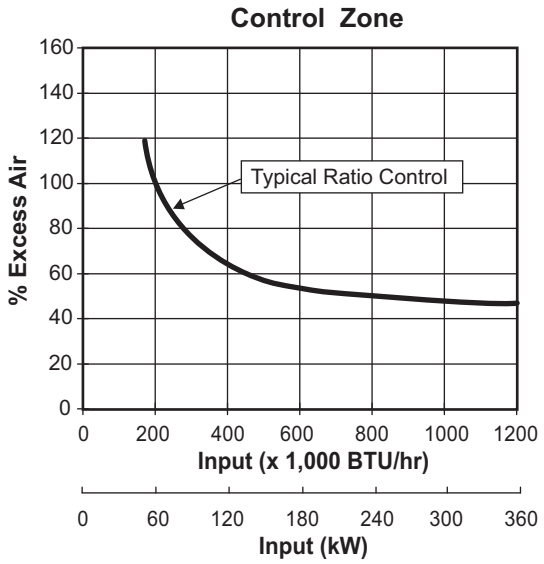

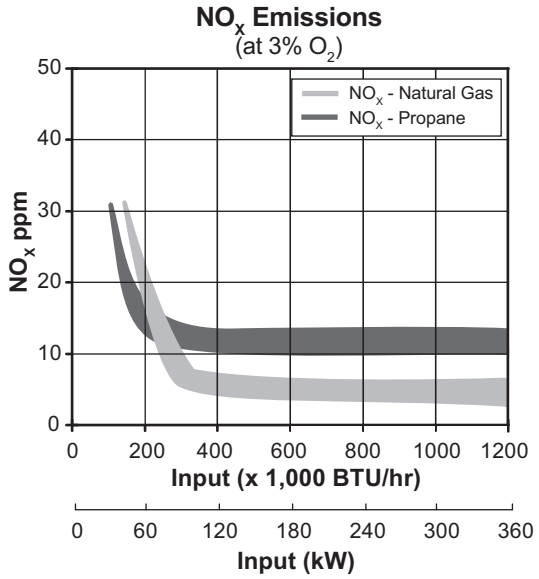

Fuel/Input Measurement
System design must include fuel flow measurement upstream of the burner. Eclipse recommends its 4-5 FOM (Fuel Orifice Meter) assembly number 302084-5 for natural gas. See Bulletin 930 for details.

Secondary By-Pass Fuel Setting:

Fuel	ΔP "w.c. (mbar)*
Natural Gas	4.0 (10.0)
Propane	1.0 (2.5)

*Measured between Tap "E" and the chamber @ low fire.

NOTE: Input at low fire changes with ratio regulator adjustment.

NO_x emission data is given for:
- Ambient combustion air (~70°F, 21°C)
- Less than 1000°F (540°C) firing chamber
- Minimal process air velocity
- Low fire input adjusted to 143,000 BTU/hr (42 kW)
- Neutral chamber pressure

Emissions are influenced by:
- Chamber conditions
- Fuel type
- Firing rate
- Ratio regulator adjustments
- Combustion air temperature

CO emissions are largely influenced by chamber conditions. Contact your local Eclipse representative for an estimate of CO emissions on your application.

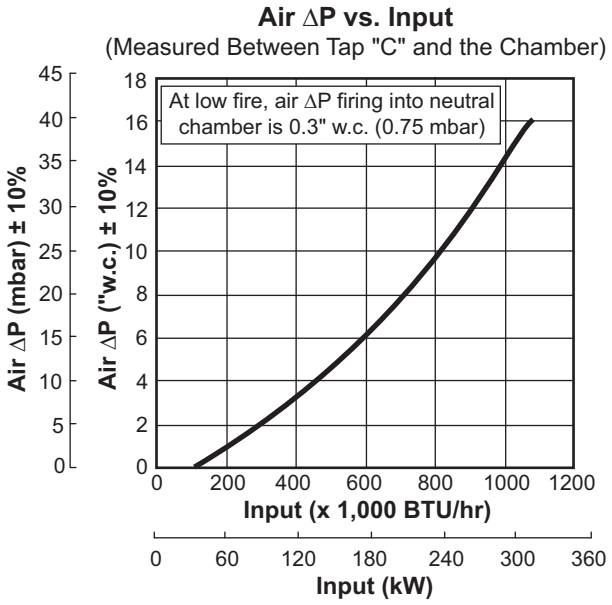

Dimensions in mm (inches)

Packaged Blower

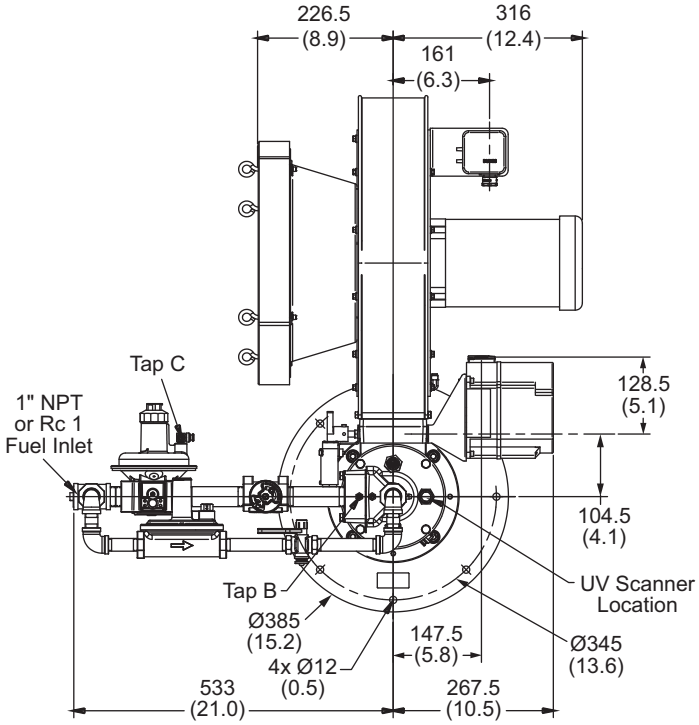

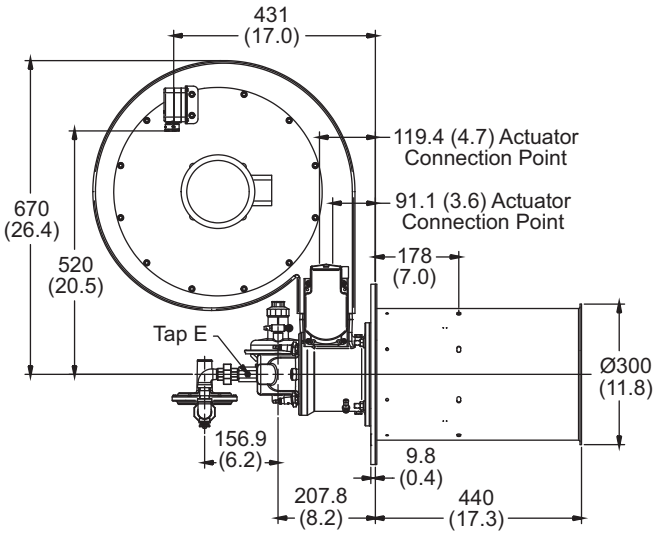

Refractory Plug

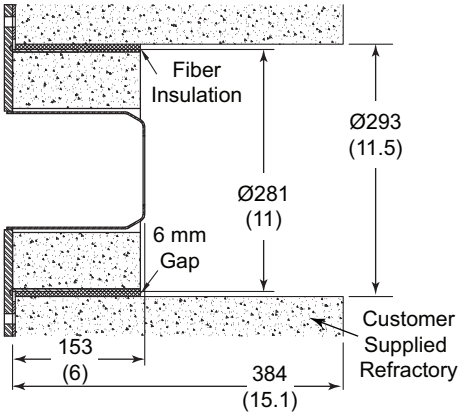

Pilot Ready Option
(Shown with remote blower option)

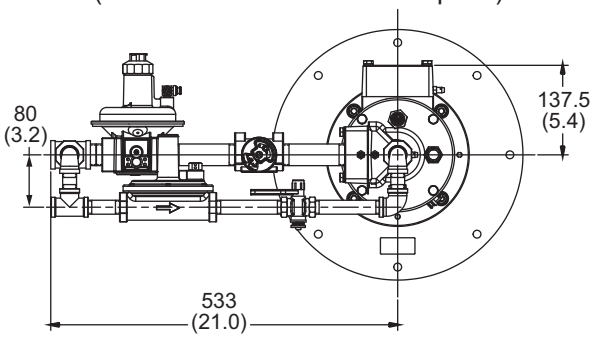

Remote Blower

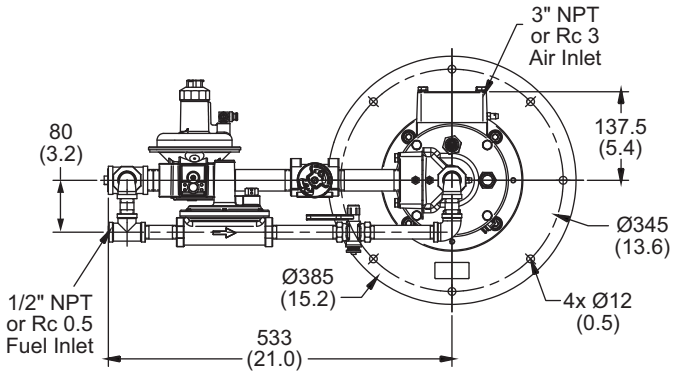

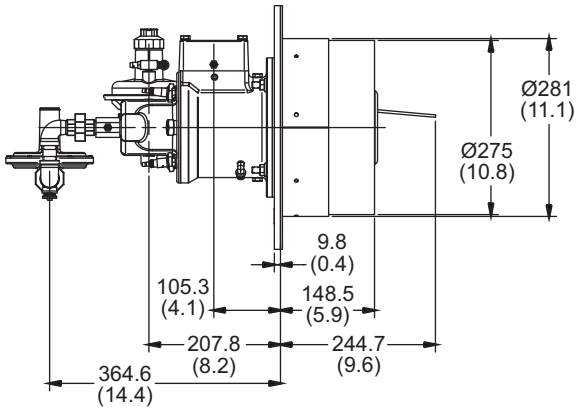

ECLIPSE®
Innovative Thermal Solutions
www.eclipsenet.com